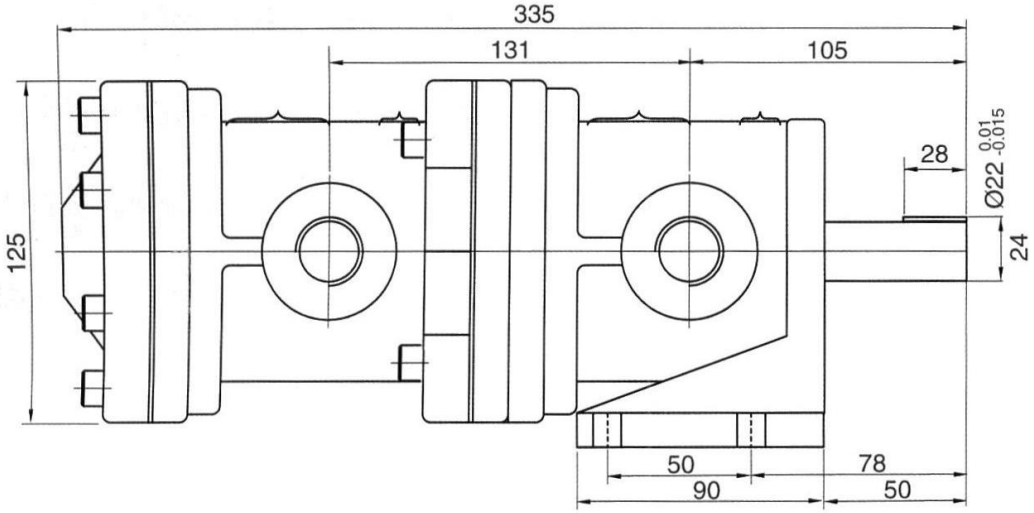

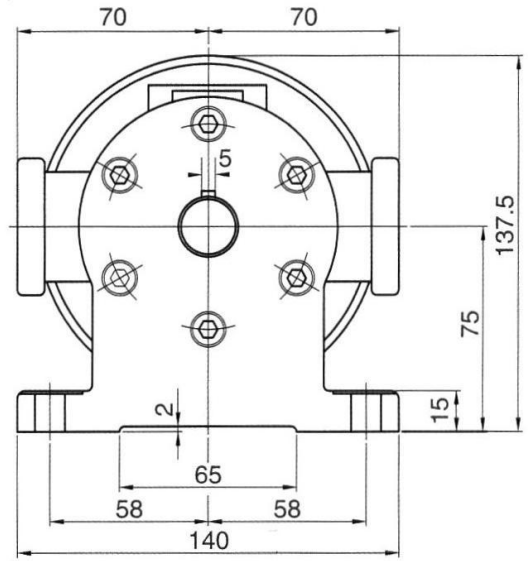

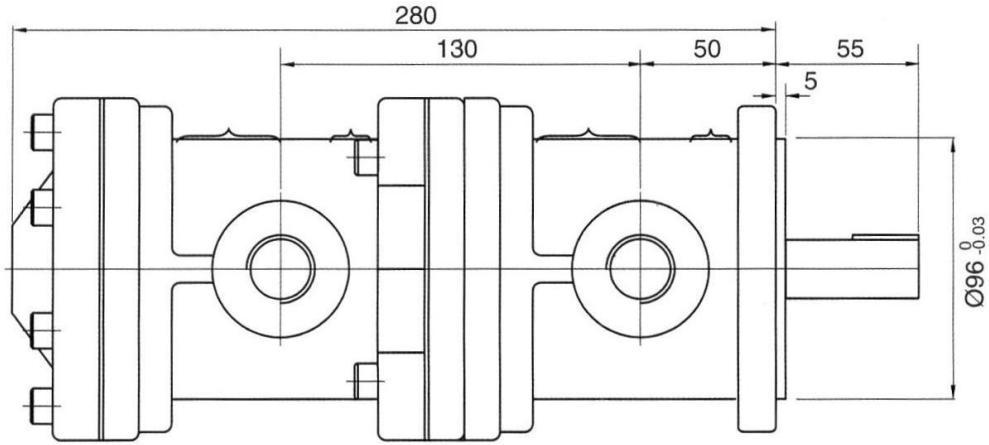

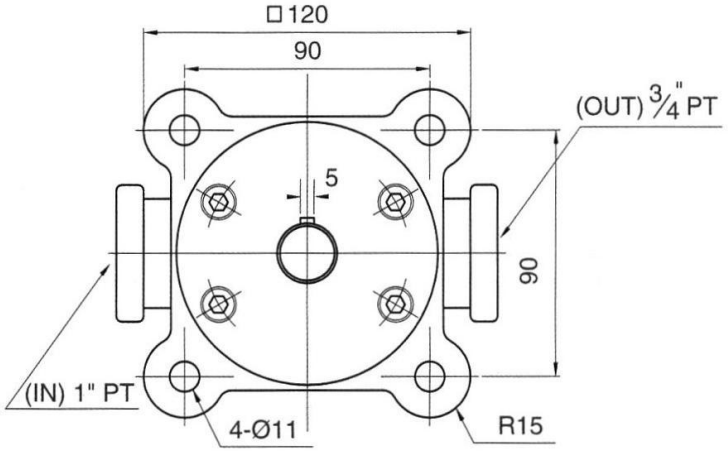

MODEL:50T-*+50T-* Series
單位:mm Unit:mm